PAPER • OPEN ACCESS

A Survey on Deep Learning in Crop Planting

To cite this article: Xiaofen Yang and Ming Sun 2019 *IOP Conf. Ser.: Mater. Sci. Eng.* **490** 062053

IOP Conf. Series: Materials Science and Engineering **490** (2019) 062053 doi:10.1088/1757-899X/490/6/062053

A Survey on Deep Learning in Crop Planting

Xiaofen Yang [1], Ming Sun[1,*]

[1]College of Information and Electrical Engineering, China Agricultural University, Key Laboratory of Modern Precision Agriculture System Integration Research, Ministry of Education, Key Laboratory of Agricultural Information Acquisition Technology, Ministry of Agriculture, Beijing Engineering and Technology Research Centre for Internet of Things in Agriculture, Beijing 100083, China;

*Corresponding author e-mail: sunming@cau.edu.cn

Abstract. In recent years, with the explosive growth of data, deep learning has become one of the hottest research areas in artificial intelligence. Deep learning has been widely used in many fields such as medical field, industry, transportation system, agriculture is no exception. Crop planting is a vital part of agriculture. Here, we review deep learning applications in crop planting. In addition, we discuss the challenges and future trend of deep learning in crop planting. We hope that this review could promote more researchers to apply deep learning methods in crop planting field.

1. Introduction

With the rapid development of large data technology, Internet of things technology, cloud computing technology and artificial intelligence technology, agriculture has undergone tremendous changes and is becoming more intelligent. Smart farming regards agriculture as an organic whole system, and comprehensively applies information technology in production. Perception technology, extensive intercommunication technology and deep intelligent technology make the operation of the agricultural system more effective and smarter, so as to achieve the strong competitiveness of agricultural products, the sustainable development of agriculture, the effective use of rural energy and environmental protection [1]. Crop planting is the most important part of agriculture. Crop planting is closely related to addressing population hunger problem.

Deep learning, a branch of machine learning, has recently become one of the hottest research areas in artificial intelligence [2]. Compared to traditional machine learning methods, deep learning is about “deeper” neural networks that provide a hierarchical representation of the data [3]. The most important advantage of deep learning is that reduced effort in feature engineering. Deep learning has been widely used in many fields such as computer vision, natural language processing, automatic speech recognition, etc. Deep learning applications in crop planting indicates the large potential.

2. Deep learning

Shallow learning has the deficiency of feature expression and the dimensionality disaster problems. And the features need to be designed by human experts. Deep learning solves these problems through extracting these features automatically from raw data. Deep learning has become one of new research direction in artificial intelligence [4]. It has been successfully applied in pattern recognition, image processing, natural language processing, text processing, face recognition, speech recognition and some other domains [5,6]. The common deep learning architecture includes convolutional neural

network (CNN), deep belief networks (DBN), recurrent neural network (RNN). CNN is a typical supervised learning model with strong adaptability, which is often used to process the image data. Figure 1 is an example of typical CNN architecture, which describes how to classify the pest types from the in-filed images. RNN is designed to handle sequential information due to the memory unit [7]. The typical RNN structure is shown in the figure 2. In addition, For RNN, a very important concept is the moment. The RNN will give an output for each moment's input combined with the state of the current model. DBN consists of several restricted Boltzmann Machines layers, which can be used for classification and generation data tasks. An autoencoder (AE) is a neural network that reproduces the input signal as much as possible. These basic architectures have appeared many variants to meet different demands of different fields. Figure 3 describes the share of each method of deep learning in crop planting, which indicates CNN is the most widely one among the methods of deep learning.

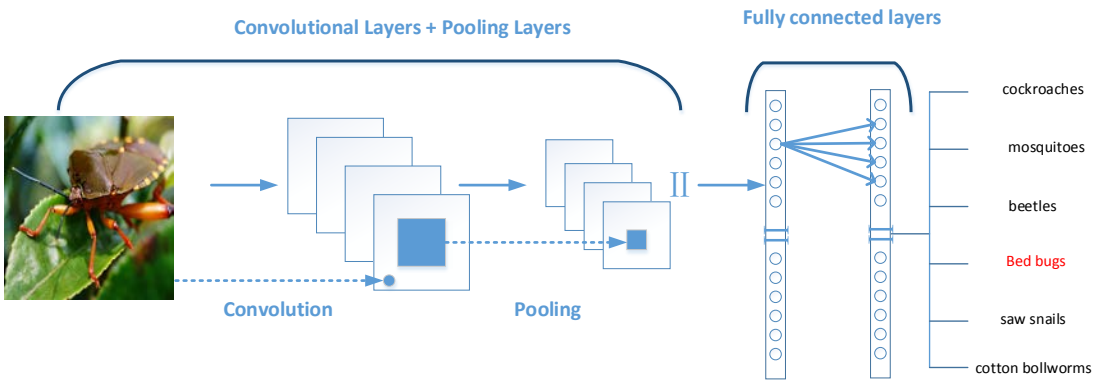

Figure 1. Typical CNN structure

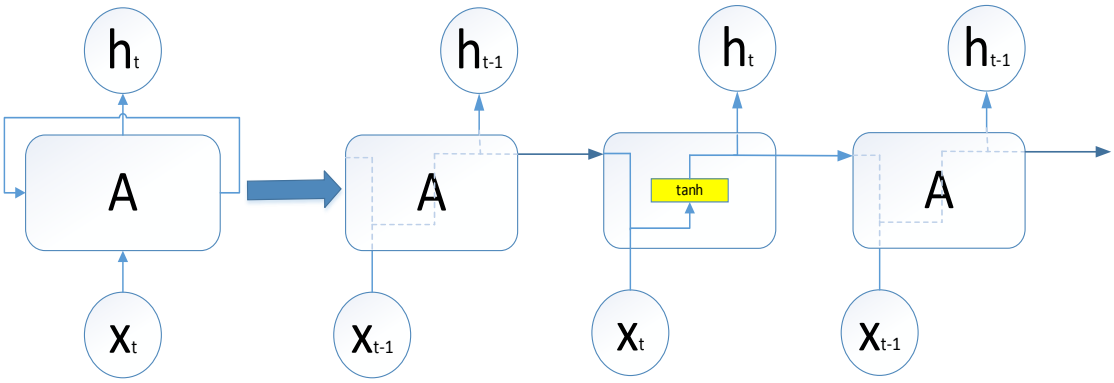

Figure 2. Typical RNN structure.

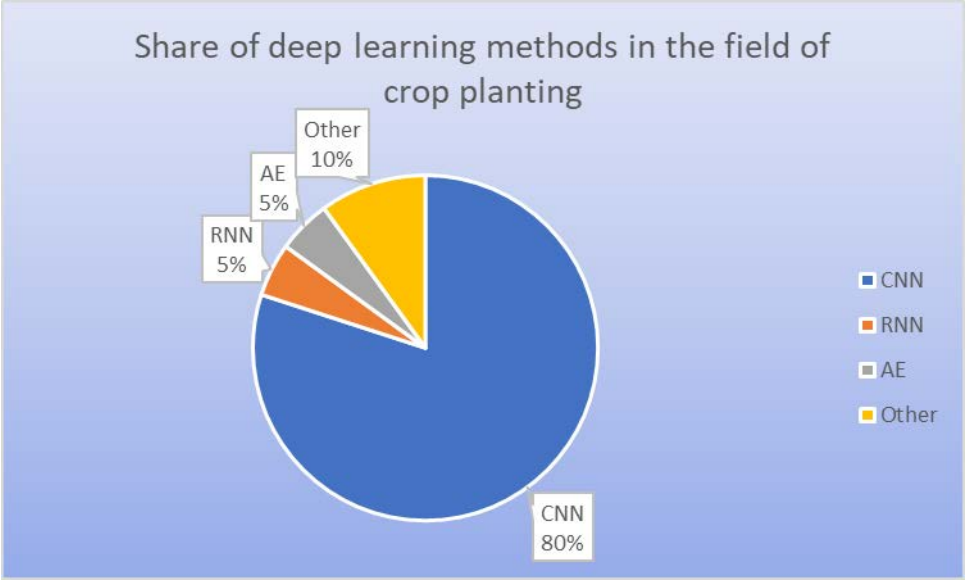

Figure 3. Share of deep learning methods in crop planting.

Open source deep learning frameworks used commonly include Theano, TensorFlow, Caffe, DeepLearning4, Keras, MXNet and so on, as shown in Table 1.

Table 1. Some deep learning frameworks and their features

Framework	Core language	Institution	Features	Benefits	Cons
Theano	python	University of Montreal	computational graph, automatic differentiation	flexible, lots of libraries	slow compilation and runtime, non-distributed
TensorFlow	C++/Python	Google	computational graph, automatic differentiation	flexible, support visualization tools	slow, non-distributed
Caffe	C++/Python	BVLC	computer vision oriented	fast, architecture as a file	Support only CNN and MLP, hard to extend, non-distributed
Keras	Python	fchollet	High level neural network API	Easy to use, modularity, easy to extend	slow runtime, more memory occupancy
MXNet	R/Julia/C++/Scala/ MATLAB/ JavaScript	Amazon	computational graph, automatic differentiation	light weight, high, portability, easy to expand	Small community

3. Deep learning applications in crop planting

Recently the application of deep learning in crop planting has been increasing and diversified. We describe the relevant works including crop planning, plant phenotyping study, plant disease study, pest identification, crop type classification and crop yield estimation (Table 2).

To improve the productivity of the agricultural land, Sehgal et al. [8] used ViSeed, a visual analytics tool, to predict optimal soybean seed variety. The study of plant phenotypes is increasing in recent years. Pound et al. [9] performed the localization and counting wheat spikes and spikelets with over 95% accuracy. Similar to Pound et al. [9], Li et al. [10] in identified wheat spikes using Laws texture energy. The result was over 80% accuracy. Baweja et al. [11] developed the faster RCNN to count the stalk and measure stalk width of Sorghum plants. The method applies equally to other broadacre annual crops. Aich et al. [12] used the a deconvolutional network and a convolutional network to count the rosette leaves. Pound et al. [13] proposed CNN for root and shoot feature identification and localization. Douarre et al. [14] proposed the CNN architecture for root/soil segmentation from X-ray tomography images. The learning process is based on purely synthetic soil and root. As for the monitoring phenology of agricultural plants, Yalcin et al. [15] utilized a deep learning architecture to classify phenological stages of plants. Pereira et al. [16] identified specific changes in the different electrical signals of plants based on different methods. The result showed that deep learning method was not the best choice in this case.

Weed management is a vital part of smart farming. McCool et al. [17] deployed the deep convolutional neural network (DCNN) for weed classification. Potena et al. [18] performed the crop and weed classification task in real-time based on RGB and near infrared images. Milioto et al. [19] detected the sugar beet plants and weeds based solely on image data. Dyrmann et al. [20] used the convolutional neural network to classify crops, weeds and soil in RGB images from fields. The result showed an pixel accuracy over 94% and a 100% detection rate of both maize and weeds. Mortensen et al. [21] used a modified version of VGG-16 deep neural network for semantic segmentation of crop and weed on the RGB image.

The control of agricultural pests is one of the important steps in crop management [22]. Cheng et al. [22] used deep residual learning to identify the pest category in the complex farmland background. The method classified 10 classes of crop pest with 98.67% accuracy rate. Ding et al. [23] proposed deep learning method for identifying and counting pests.

Crop diseases make great losses in crop yields in agricultural industry worldwide. Lu et al. [24] presented an automatic wheat disease diagnosis system based on deep learning technology, which achieved the identification of wheat diseases and localization for disease areas in wild conditions. Ferentinos. [25] developed convolutional neural network to perform plant disease diagnosis using leaves images with the 99.53% success rate. Lu et al. [26] proposed deep convolutional neural networks (CNNs) to identify 10 common rice diseases with an accuracy of 95.48%. Crop yield is related to the food supply [27]. Kuwata et al. [27] used deep learning method for crop yields estimation. Rebetez et al. [28] combined histograms and convolutional units to recognize crop types from aerial imagery.

Table 2. Applications of deep learning in crop planting

Applications		Models used	Performance	Reference
Crop Planning		LSTM model+ RF Classifier	2 different solution sets are given: i) Common solution for entire region, ii) Differentiated solutions at sub-region level.	[8]
Plant Phenotyping	Localization and counting wheat spikes and spikelets	CNN	Counting accuracy for spikes is 95.91% and spikelets is 99.66%	[9]
	Identification of wheat spikes	A neural network-based method	The spike identification accuracy is 86.6%	[10]
	Counting the stalk and measurement stalk width of Sorghum plants	Faster-RCNN architecture and FCN	R-squared correlation is 0.88 for stalk count	[11]
	Leaf counting	CNN	Mean and standard deviation of absolute count difference is 1.62 and 2.30	[12]
	Root and shoot feature identification and localization	CNN	Over 97% accuracy.	[13]
	Root/soil segmentation	CNN	Quality measure=0.57	[14]
Plant Phenology Recognition		CNN	The best accuracy is 88.12%	[15]
Classification of plant electrophysiological responses to environmental stimuli		Four machine learning algorithms (CNN, OPF, KNN, SVM) together Interval Arithmetic	The best accuracy is 96%	[16]
Weed management	Weed classification	CNN	Accuracy is over 95%	[17]
	Crop/weed detection and classification	CNN	Accuracy is over 94% and a 100% detection rate of both maize and weeds	[18]
	Sugar beets and weeds classification	CNN	Precision is over 99%.	[19]
	Classification of weeds and crop	CNN	The best accuracy is 94.4%	[20]
Pest management	Pest identification	CNN	Classification accuracy is 98.67%	[22]
	Pest Counting	CNN	The best accuracy is 98.4%	[23]
Disease diagnosis	Wheat disease diagnosis	CNN	The mean recognition accuracies is over 95%.	[24]
	Plant disease detection and diagnosis	CNN	Accuracy = 99.35%.	[25]
	Identification of rice diseases	CNN	Accuracy = 95.48%	[26]
Corn yield estimation		AE	RMSE = 6.298	[27]
Crop type classification		A hybrid neural network architecture	F1-scores= 0.98	[28]

4. Discussion and Conclusion

With the explosive growth of data, deep learning has become a hot research direction of artificial intelligence. Deep learning improves performance a lot on many issues compared to traditional machine learning algorithms. However, deep learning is still in early childhood. There are some problems with deep learning: black box problems, data volume problem and the selection problem of appropriate architecture [4]. Furthermore, to overcome the limitations of deep learning, semi-supervised learning, generative adversarial networks and deep reinforcement learning require further study [29,30,31]. And crop diseases, crop genotyping, crop breeding, crop planning and crop yield estimation based on deep learning algorithm still need more research in the future. From 2015 to the present, in the field of crop planting, there are many researches, such as plant phenotype, crop classification, information acquisition of cultivated land, weed management, pest management, disease management, yield prediction, plant species identification, identification of stored grain insects, classification of plant phenological information, and specific changes of plant electrical signals caused by different environmental factors. Because most of the researches are based on image processing, so many algorithms choose convolutional neural networks. The results show that deep learning has achieved better results than traditional machine learning in most fields. But not every field. In 2018, Pereira et al. [16] used different automatic classification methods to identify specific changes in plant electrical signals caused by different environmental factors. It shows that deep learning is not the best method in this case. Most cases show deep learning has better performance in processing image data.

Deep learning has been applied in crop planting domain recently. In this paper, we provided an extensive review based on deep learning algorithm in crop planting domain, including crop planning, plant phenotyping study, plant disease study, pest identification, crop type classification, crop yield estimation and other researches. For future work, we plan to improve performance in existing researches and apply deep learning approaches to other areas of crop planting for solving more problems in crop planting.

Acknowledgments

The authors would like to thank Prof. Ming Sun at China Agricultural University for discussions and suggestions.

References

[1] D. Li. Internet of Things and Wisdom Agriculture. Agricultural Engineering, 2012.
[2] S. Min, B. Lee, S. Yoon. Deep learning in bioinformatics. Briefings in Bioinformatics, 2016, 18(5):851.
[3] A. Kamilaris, F. X. Prenafeta-Boldú. Deep learning in agriculture: A survey. Computers & Electronics in Agriculture, 2018, 147(1):70-90.
[4] Y. Lecun, Y. Bengio, Hinton G. Deep learning. Nature, 2015, 521(7553):436.
[5] D. Li, Y. Dong. Deep Learning: Methods and Applications. Foundations and Trends in Signal Processing, 2014, 7(3):197-387.
[6] G. Litjens, T. Kooi, B. E. Bejnordi, et al. A survey on deep learning in medical image analysis. Medical Image Analysis, 2017, 42(9):60-88.
[7] G. Cheng, J. Han. A Survey on Object Detection in Optical Remote Sensing Images. Isprs Journal of Photogrammetry & Remote Sensing, 2016, 117:11-28.
[8] G. Sehgal, B. Gupta, K. Paneri, et al. Crop Planning using Stochastic Visual Optimization. 2017.
[9] M. P. Pound, J. A. Atkinson, Wells D M, et al. Deep Learning for Multi-task Plant Phenotyping. IEEE International Conference on Computer Vision Workshop. IEEE Computer Society, 2017:2055-2063.
[10] Q. Li, J. Cai, B. Berger, et al. Detecting spikes of wheat plants using neural networks with Laws texture energy. Plant Methods, 2017, 13(1):83.
[11] H. S. Baweja, T. Parhar, O. Mirbod, et al. StalkNet: A Deep Learning Pipeline for High-Throughput Measurement of Plant Stalk Count and Stalk Width. 2018.

[12] S. Aich, I. Stavness. Leaf Counting with Deep Convolutional and Deconvolutional Networks. IEEE International Conference on Computer Vision Workshop. IEEE Computer Society, 2017:2080-2089.
[13] M. P. Pound, J. A. Atkinson, A. J. Townsend, et al. Deep machine learning provides state-of-the-art performance in image-based plant phenotyping. Gigascience, 2017, 6(10):1-10.
[14] C. Douarre, R. Schielein, C. Frindel, et al. Deep learning based root-soil segmentation from X-ray tomography images. bioRxiv preprint,2016, doi: http://dx.doi.org/10.1101/071662.
[15] H. Yalcin. Plant phenology recognition using deep learning: Deep-Pheno. International Conference on Agro-Geoinformatics. IEEE, 2017:1-5.
[16] D. R. Pereira, J. P. Papa, G. F. R. Saraiva, et al. Automatic classification of plant electrophysiological responses to environmental stimuli using machine learning and interval arithmetic. Computers & Electronics in Agriculture, 2018, 145:35-42.
[17] C. McCool, T. Perez. Improved vision-based weed classification for robotic weeding – a method for increasing speed while retaining accuracy. 7th Asian-Australasian Conference on Precision Agriculture.2017.
[18] C. Potena, D. Nardi, A. Pretto. Fast and Accurate Crop and Weed Identification with Summarized Train Sets for Precision Agriculture. International Conference on Intelligent Autonomous Systems. Springer, Cham, 2016:105-121.
[19] A. Milioto, P. Lottes, C. Stachniss. Real-Time Blob-Wise Sugar Beets VS Weeds Classification for Monitoring Fields Using Convolutional Neural Networks. 2017, IV-2/W3:41-48.
[20] M. Dyrmann, A. K. Mortensen, H. S. Midtiby, et al. Pixel-wise classification of weeds and crop in images by using a Fully Convolutional neural network. CIGR-AgEng conference. 2016.
[21] A. K. Mortensen, M. Dyrmann, H. Karstoft, et al.Semantic Segmentation of Mixed Crops using Deep Convolutional Neural Network. CIGR-AgEng conference.2016.
[22] X. Cheng, Y. Zhang, Y. Chen, et al. Pest identification via deep residual learning in complex background. Computers & Electronics in Agriculture, 2017, 141:351-356.
[23] W. Ding, G. Taylor. Automatic moth detection from trap images for pest management.Computers & Electronics in Agriculture, 2016, 123(C):17-28.
[24] J. Lu, J. Hu, G. Zhao, et al. An In-field Automatic Wheat Disease Diagnosis System. Computers & Electronics in Agriculture, 2017, 142.
[25] K. P. Ferentinos. Deep learning models for plant disease detection and diagnosis. Computers & Electronics in Agriculture, 2018, 145:311-318.
[26] Y. Lu, S. Yi, N. Zeng, et al. Identification of Rice Diseases using Deep Convolutional Neural Networks. Neurocomputing, 2017, 267.
[27] K. Kuwata, R. Shibasaki. Estimating crop yields with deep learning and remotely sensed data. Geoscience and Remote Sensing Symposium. IEEE, 2015:858-861.
[28] J. Rebetez, H. F. Satiza´Bal, M. Mota, et.al. Augmenting a convolutional neural network with local histograms - A case study in crop classification from high-resolution UAV imagery. ESANN 2016 proceedings, European Symposium on Artificial Neural Networks, Computational Intelligence and Machine Learning.2016.
[29] S. J. Pan, Q. Yang. A Survey on Transfer Learning. IEEE Transactions on Knowledge & Data Engineering, 2010, 22(10):1345-1359.
[30] T. Haarnoja, A. Zhou, P. Abbeel, et al. Soft Actor-Critic: Off-Policy Maximum Entropy Deep Reinforcement Learning with a Stochastic Actor. 2018.
[31] I. J. Goodfellow, J. Pouget-Abadie, M. Mirza, et al. Generative Adversarial Networks. Advances in Neural Information Processing Systems, 2014, 3:2672-2680.