MATEC Web of Conferences **97**, 01070 (2017) DOI: 10.1051/matecconf/20179701070
ETIC 2016

River Debris Management System using Off-Grid Photovoltaic Module

Intan Mastura Saadon[1,*], *Herlanda* Windiarti[1] , *Emy Zairah* Ahmad[1] , and *Khalil Azha* Mohd Annuar[1]

[1] Department of Electrical Engineering Technology, Faculty of Engineering Technology, University of Technical Malaysia Melaka, Malaysia

Abstract. In Malaysia, Malacca River has long been the tourism attraction in Malacca. However, due to negligence, the river has been polluted by the litters thrown by tourists and even local residents, thus reflects a negative perception on Malacca. Therefore, this paper discusses about a fully automated river debris management system development using a stand-alone photovoltaic system. The concept design is to be stand alone in the river and automatically pull debris towards it for disposal. An off-grid stand-alone photovoltaic solar panel is used as renewable energy source connected to water pump and Arduino Uno microcontroller. The water pump rotates a water wheel and at the same time moves a conveyor belt; which is connected to the water wheel by a gear for debris collection. The solar system sizing suitable for the whole system is shown in this paper. The dumpster barge is equipped with an infrared sensor to monitor maximum height for debris, and instruct Arduino Uno to turn off the water pump. This system is able to power up using solar energy on sunny days and using battery otherwise.

1 Introduction

Malacca is a historical state in Malaysia and has been listed as UNESCO World Heritage Site since 7th July 2008. One of the tourism attractions in Melaka is the river cruise along Melaka River canal consequently, the cleanliness of the river is critical in order to preserve the tourism attraction. River debris that floats in the river is one of the major problems that occur in any water tourism attraction spots. It could be due to irresponsible visitors littering or the rain that washes the debris into the river. Besides affecting the tourism industry, polluted rivers also affect aquatic animals' habitat. To overcome this, an off-grid solar river debris management system prototype is developed and presented in this paper. It uses renewable energy for promoting environmental friendly technology in line with Malacca city slogan; City of Green Technology. Off-grid solar power is used to reduce maintenance and manpower besides being able to collect floating river debris automatically. Fig. 1 shows the concept design of this system. This concept will be developed based on the actual size upon the completion of the prototype

* Corresponding author : mastura@utem.edu.my

DOI: 10.1051/matecconf/20179701070

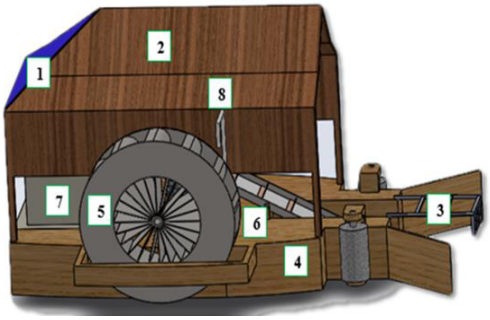

No	Parts
1	Solar Panel
2	Roof
3	Debris Raking
4	Base
5	Water Wheel
6	Conveyor
7	Dumpster Barge
8	Water Pump

Fig. 1. Side View of the Concept Design and the Parts Description

Figure 2 shows the electrical and electronic block diagram of the system. Solar charger controller will act as a regulator that controls the voltage in and out. Load is controlled from the solar charger controller and is supplied to Arduino Uno and the water pump. Water pump is controlled by a relay that is connected to Arduino, based on the input from IR sensor.

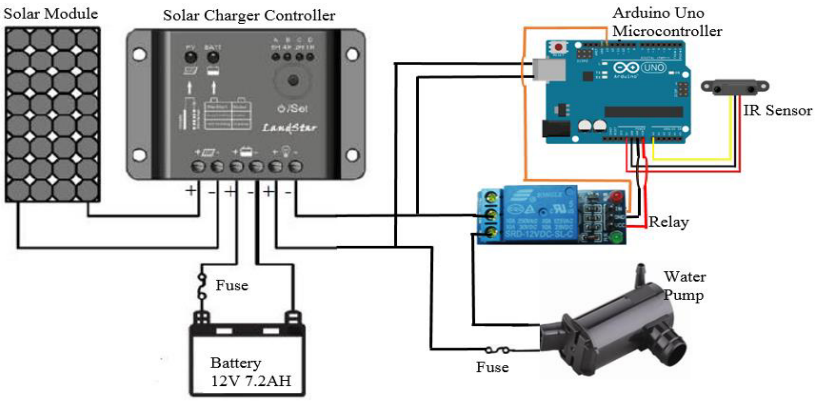

Fig. 2. Block Diagram of Electrical and Electronic Design for the System

1.1 Solar system design

1.1.1 Photovoltaic system

Photovoltaic (PV) is a system which converts the solar power into electrical energy. Sun is an endless source for PV system to produce direct current (DC) [1]. Photovoltaic effect is when light emitted on a two-layer semiconductor, it produces voltage between the layers. Produced output current can be used through external electrical circuit. Solar panels must be slanted and oriented at optimum angles so as to collect the maximum solar energy available in a specific region [2]. The orientation and the tilt of a solar panel strongly affect the amount of the collected yield. In Malaysia, tilt angle during dry season is 0° [3].

There are different types of silicon solar cells including mono-crystalline, thin-film, poly-crystalline silicon and amorphous. They differ in atomic structure, performance and comparisons as well as other aspects [4]. Amorphous is cheaper but there's a big difference in efficiency [5]. Mono-crystalline silicon has the highest efficiency compared to others [6],

hence an off-grid mono-crystalline PV module is selected for this research. For off grid system, the DC output power from the battery will be used for the own system [7].

1.1.2 Battery

In small scale stand-alone system, choosing the suitable battery as power bank is important. The battery will store electrical energy produced by module during the day time and deliver it during cloudy days [8]. The battery charging will be controlled by charge controller. In stand-alone system, battery needs to supply higher current than PV array when it needs to start motors. A deep cycle battery is suitable to be used in PV system as it is maintenance free, low price and have longer life span [9]. It can store charge according to its capacity described in Amp-hour (AH).

1.1.3 Charger controller

Charger controller acts like a voltage regulator which is placed between batteries and PV module [8]. It controls the battery from over charging that weakens the bonds of electrolyte and over discharging that reduces the battery life span. There are few types of charger controller but mainly two types are widely used in solar system which is pulse-width-modulation (PWM) Controller and maximum power point tracking (MPTT) controllers [6]. The PWM charging efficiency ranges from 60% to 70%, and 75% to 85% while MPTT 90% to 93%. MPTT has excellent efficiency in charging but it is costly [10]. PWM controller is selected to be used in this project as it is cheaper and the efficiency of the controller is less considered compared to its price.

1.2 Water pump

Selecting water pump is based on the application of the pump and the amount of water can be pumped. The volume flow rate should be high [11]. This project uses a brushless motor submersible pool water pump. The pump specification is 6 watt, 12Vdc and water flow rate is 250L/hr made by plastic. A low powered dc pump is used to fit the size of this prototype which is sufficient to rotate the water wheel. In system development a higher power AC pump will be used but it has to consider an inverter for DC to AC conversion.

1.3 Analog distance infrared sensor

Infrared (IR) distance sensors are useful for measuring distances without actually touching a surface. Selection of an infrared sensor depends on the application, sensitivity and range of distance it can measure. Based on the size of this prototype, a 10-80 cm distance range infrared sensor is used at the dumpster barge. Distance sensor bounces IR off objects to determine how far away they are. It returns an analog voltage used to determine how close the nearest object is. The sensor measures with analog signal ranges between values of 0 to 1023 when observed by Arduino serial monitor [12].

2 Development of the prototype

Figure 3 shows the prototype developed for this system. Plywood is used as platform of this unit, supported by buoyant paddings to float the unit on water. Water wheel and conveyor belt is supported by an L-bar. When system is on, the water pumped is supplied with

DOI: 10.1051/matecconf/20179701070

sufficient power and is able to rotate the water wheel and this successfully collect all debris that float in the water.

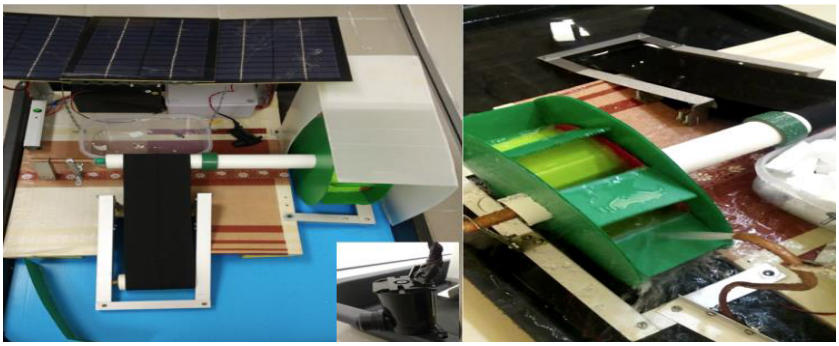

Fig. 3. Prototype Developed for River Debris Management System

3 Results and analysis

3.1 PV system sizing

To determine the sizing of PV module, the total load should be determined and it is expressed as Watt hour per day (Wh/day). The formula used for PV module sizing and battery sizing are shown below:

$$Wh = Wp \times PSH \times Pr \tag{1}$$

$$I = Wh / V \tag{2}$$

Wh = units of energy produced, Wp = module peak watts, PSH = peak sun hour, Pr = performance ratio (0.60 – 0.70), I = battery current capacity (AH) and V = battery voltage.

For solar panel system sizing, the total load calculated is shown in Table 1. Load sizing for this prototype is calculated considering the water pump and Arduino which is 12Vdc and 1.0ampere, estimated to run for a maximum of 4 hours to do the analysis. From the table, the total load is 60Wh/day. Using the formula in Eq.1, considering 4 PSH and performance ratio of 0.7, the module peak watt obtained is 21.43Wp. The specifications of solar modules used in this project are 10W power, 12V voltage and 15A current; hence, to supply 21.43Wp, three sets of solar modules are used. The solar modules will be connected in parallel so that the output voltage is 12V, output current is 45A and output power is 30W.

Table 1. Total Load Power

Load	Quantity	Wattage (W)	Hours/day	Load Power (Wh/day)
Water pump	1	12	4	48
Others (system)	1	3	4	12
Total load	2	15	4	60

In battery sizing, the minimum capacity of battery current is determined using Eq.2. For this type of load, the battery used is 12V, so the minimum current capacity obtained is 5AH

DOI: 10.1051/matecconf/20179701070

and battery selected must be 5AH or above. Therefore, a 12V battery with capacity of 7.2AH is used.

3.2 PV module data collection and analysis

To analyze the solar module, data collection is made on the off-grid PV module from real condition test under the sun. The data collected are irradiance, temperature, open circuit voltage, short circuit current, voltage at maximum point, current at maximum point and battery charging voltage. The tilt angle is set to 15° angle for solar module and the results were recorded every 1 hour starting from 9.00am to 5.00pm.

To get the irradiance value, Seaward Solar 200R Irradiance Meter is used. It is placed on top of the module in order for it to read the data that has to be collected. While exposing the solar module under the sunlight, the temperature of the solar module is also recorded, by using Fluke 568 IR Thermometer. The fluke meter is shot behind the module to get the temperature. Besides that, the electric current that flows in the conductor is recorded using a clamp meter. The module is shorted to obtain the range of current. Power voltage and battery voltage values recorded using a multi meter. Results of the data collected for this off-grid PV solar system is recorded in Table 2.

Table 2. Data Collection for PV Module

Time	Tilt Angle , (°)	Solar Radiation , (W/m2)	Temperature , (°C)	Power Voltage, (Vmp)	Power Current , (Imp)	Power Point Watts, (W)	Battery Voltage , (V)
9.00am	15	807	39.2	12.04	0.07	0.84	11.42
10.00am	15	867	48.6	12.32	0.11	1.35	11.48
11.00am	15	896	54.9	12.32	0.16	1.97	11.56
12.00pm	15	912	61.4	12.34	0.13	1.60	11.64
1.00pm	15	1030	63.8	12.33	0.20	2.47	11.76
2.00pm	15	965	62.1	12.33	0.15	1.84	11.88
3.00pm	15	972	62.6	12.37	0.19	2.35	12.09
4.00pm	15	925	56.8	12.20	0.15	1.83	12.22

From Table 2, it can be said that the irradiance and temperature is low in the morning and increasing from time to time. The maximum irradiance is 1030W/m2 and maximum temperature is 63.8°C, both are seen at 1.00pm. This is because afternoon is the peak time to obtain high irradiance and the sky is cloudless. It can be concluded that the power produced is sufficient to charge the battery and run the system. The relationship between produced power voltage versus irradiance and temperature is shown in Figure 4 and Figure 5.

DOI: 10.1051/matecconf/20179701070

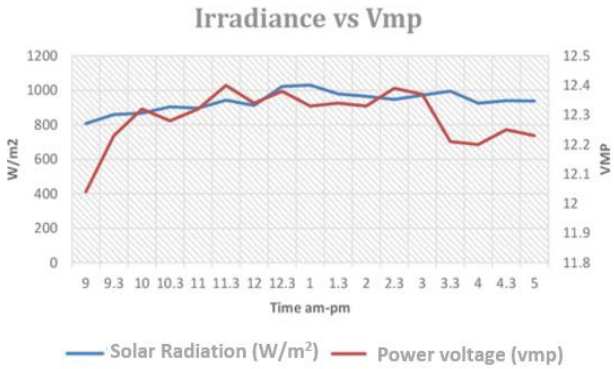

Fig. 4. Irradiance Effect on Voltage

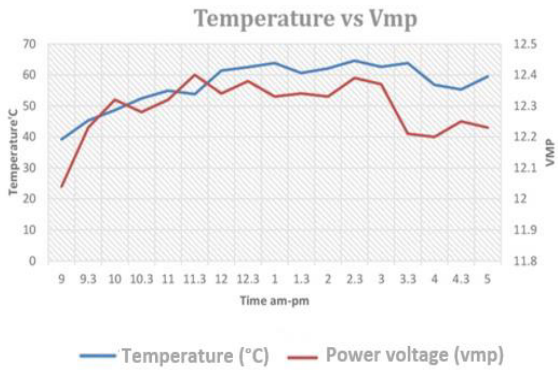

Fig. 5. Temperature Effect on Voltage

The voltage increases due to increasing of radiation and temperature but maintains until the evening. The voltage starts to drop from 3.00pm to 5.00pm. Solar energy intensity from sun which absorbed by solar module to produce energy. Irradiation may be blocked by cloud and shading factors. When the irradiance is blocked, the energy or volt produced by solar module decreases. The solar cell and panel materials absorb the solar irradiation and also absorb the heat. Temperature also plays an important role in producing energy. Due to this, the voltage starts to drop and the performance of solar panel reduces.

Figure 6 shows the battery charging time. The voltage increases steadily until it is fully charged ~12V. The continuous current required to charge the battery is 7.2AH by 4hours, which is 1.8 Ampere. The PV module continuous current is ~2.7A, and is sufficient to charge the battery.

DOI: 10.1051/matecconf/20179701070

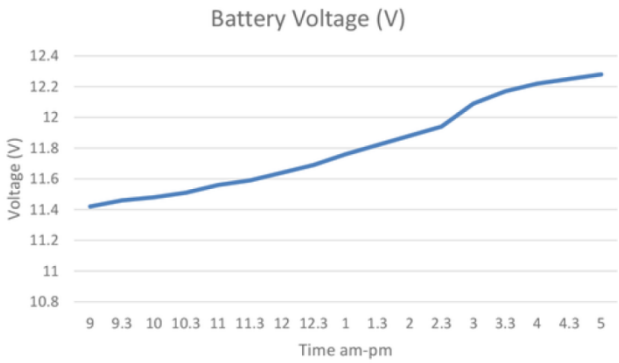

Fig. 6. Battery Charging Time

3.3 Water pump flow rate

The water pump is tested to check the flow rate per hour. The pump is turned on to supply 1000ml of water on the water wheel for three trials. The readings are shown in Table 3. From this table, the average reading is 13.9s or is 4,286ml/min. From this calculation, the flow rate is proven to be able to rotate the water wheel and at the same time create water current that brings river debris towards the system.

Table 3. Water Flow Rate by the Water Pump

Water Level	Reading 1 (s)	Reading 2 (s)	Reading 3 (s)	Average (s)
1000ml	13.53	14.03	14.11	13.90

3.4 IR Sensor on Dumpster Barge Sensitivity

. The dumpster barge prototype is set to collect trash up to 8cm. The distance sensor is placed above the dumpster barge, and is set to 18cm to indicate that the dumpster barge gas reached its maximum trash height and cutoff the water pump. A test is done by collecting sample trash into the dumpster barge to a maximum height, IR sensor detects and turns off the pump, and the time taken from empty dumpster barge to full dumpster barge is recorded in three readings as shown in Table 4. However, this depends on the type and quantity of trash. The time taken is consistent on all three readings which average is 1,139s or 19min.

Table 4. : Data for Full Dumpster Barge and Cutoff Water Pump

Trash Height	Reading 1 (s)	Reading 2 (s)	Reading 3 (s)	Average (s)
8cm	1,125	1,154	1,138	1,139

4 Summary

Automatic river debris management system is very important and should be placed at all rivers because it is environmentally safe and reduce man power. The prototype as presented in this paper is able to generate renewable energy to supply to the system. Besides that, the water wheel is capable to run the debris collection and moved into the dumpster barge by the conveyor belt. Moreover, the systems are automatically turned off when the dumpster barge is full, and avoid the barge from overflow. This system can be potentially developed into a larger scale, by considering a higher power for the water pump.

The authors would like to express deep appreciations to the Ministry of Higher Education Malaysia and Universiti Teknikal Malaysia Melaka (UTeM) for providing a PJP grant (PJP/2015/FTK(9A)/S01414), opportunity and necessary facilities to support this work.

References

1. F.Z. Zerhouni, M.H. Zerhouni, M.Zegrar, M.T. Benmessaoud, A.B. Stambouli, A. Midoun, Acta Polytech., **7**, 55-70 (2010)
2. T. Khatib, A. Mohamed, K. Sopian, Renewable Sustainable Energy Rev., **16,** 2864-2869 (2012)
3. T. Khatib, A. Mohamed, K. Sopian, Renewable Sustainable Energy Rev., (2012)
4. J. Balfour, M. Shaw, S. Jarosek, *Introduction to Photovoltaic,* (2013)
5. L.A. Dorbzanski, M. Musztyfaga, M. Giedroc and P. Pamek, J. Achv Mat and Man Eng., **55**, 307-315 (2012)
6. J. Balfour, M. Shaw, S. Jarosek, Advance Photovoltaic System Design (2013)
7. L.A. Dorbzanski, M. Musztyfaga, M. Giedroc, P. Pamek, J. Achv Mat and Man Eng., **53**, 7-13 (2012)
8. S. Sinha, A. Shukla, *From Sunlight to Electricity,* The Energy and Resources Institute. (2013)
9. A. Pradhan, S. M. Ali and P. Behera, Intl. J. of Sc. And Rsch. Publ., **2**, 1 (2012)
10. G.L. Kale and N.N. Shinde, Intl. J. of Rsch. Mech. Eng. Tech., **1**, 89 (2011)
11. A. Mohammedi, D. Rekioua and N. Mezzai, J. of Elec. Syst., **2**, 212 (2013)
12. Information on: https://www.adafruit.com/product/164